NOTE:
Field measurements are required for the product you wish to order. Please provide product accurate measurements to eliminate delays or errors in the design and manufacturing.

*** These dimensions are standard production for Spectrum Aquatics and meet FINA, NCAA, USAS, USMS, and NFHS height requirements. Please contact your Spectrum Aquatics sales representative if you would like to vary these dimensions.**

Step side is determined by standing behind your block while facing the pool.

If your deck has a slope, dimension A should be taken from the surface of the water to the level where the starting platform post meets the deck.

$ Call for additional pricing

SUBMITTED BY:_____
PRINT SIGNATURE

DATE:_____

☐ REQUST A FINAL DRAWING
☐ PROCEED WITH PRODUCTION

BY SIGNING ANYPLACE ON THIS SUBMITTAL, YOU ARE APPROVING AS IS - NO CHANGES REQUIRED.

THIS IS YOUR SUBMITTAL. SPECTRUM PRODUCTS HAS MADE EVERY EFFORT TO DESIGN TO YOUR SPECIFICATIONS. PLEASE REVIEW THIS SUBMITTAL THOROUGHLY. SPECTRUM PRODUCTS CANNOT BE RESPONSIBLE FOR ERRORS AFTER THE SUBMITTAL(S) HAS BEEN SIGNED AND APPROVED BY YOU AND/OR YOUR CUSTOMER. PLEASE INSURE ALL DIMENSIONS ARE ACCURATE AND CORRECT. IT IS THE SOLE RESPONSIBILITY OF THE CUSTOMER TO ENSURE THAT THE PRODUCT MEETS ALL APPLICABLE CODES.

FRAME
DIMENSION A:_____ DIMENSION B:_____
(SETBACK) (REQUIRED) (WATER DRAFT) (REQUIRED)

(PICK ONE)
☐ LEFT STEP (SHOWN)
☐ RIGHT STEP
☐ REAR STEP (30" SETBACK MINIMUM)

(PICK ONE)
☐ 304L STAINLESS STEEL (STANDARD)
☐ 316L STAINLESS STEEL ($)
☐ 304L STAINLESS STEEL - POWDER COATED ($)

POWDER COLOR:_____
(REQUIRED FOR POWDER COATING)

☐ 316L STAINLESS STEEL - POWDER COATED ($)

POWDER COLOR:_____
(REQUIRED FOR POWDER COATING)

TOP - WEDGE - STEP (COLOR)
☒ CHECK 01 OPTION BELOW
STEP (SIZE)
☒ CHECK 01 OPTION BELOW
NUMBERS
☒ CHECK 01 OPTION RIGHT

CUSTOM NUMBER FONT ($):_____COLOR ($):_____
(REQUIRED FOR CUSTIM BLOCK NUMBERING)

BLOCK NUMBERING:_____(REQUIRED)
EXAMPLE 01: #1-6 BLOCK #7 LEFT BLANK
EXAMPLE 02: #1-3 LEFT STEP & #4-6 RIGHT STEP

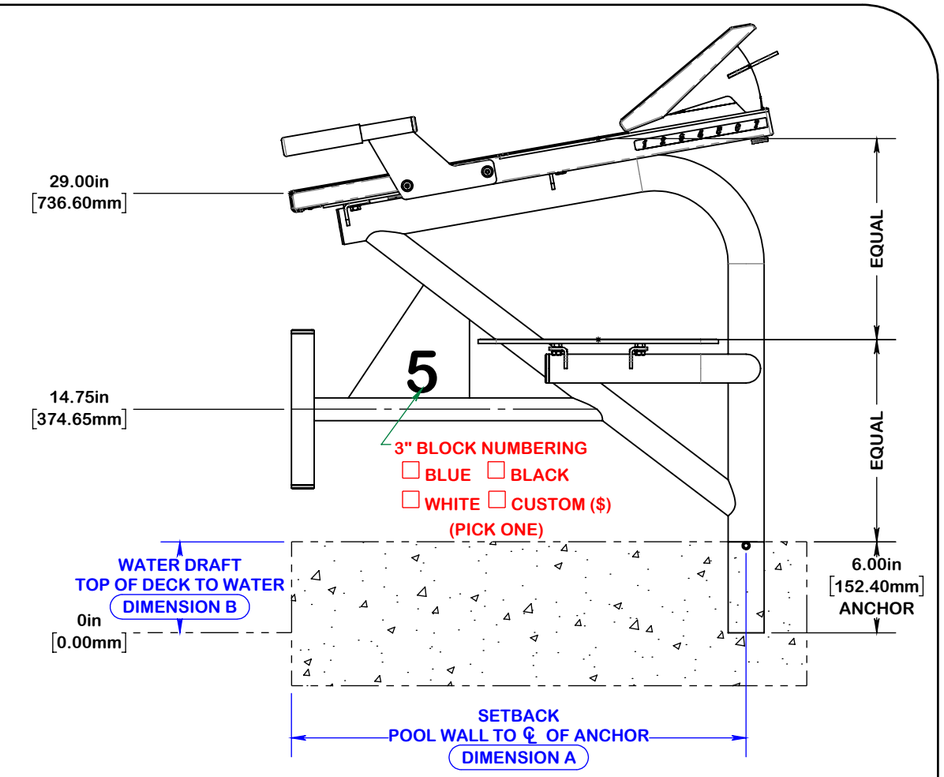

☐ SPRINT - BLACK

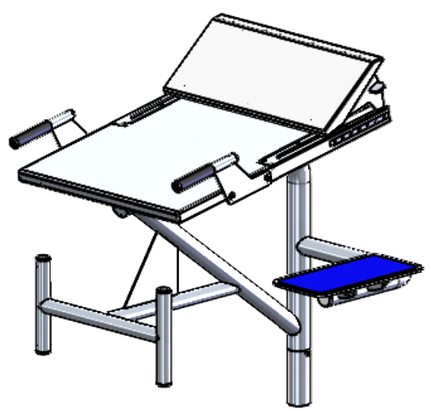

☐ SPRINT - LOGO/COLOR ($)
PLEASE PROVIDE LOGO OR COLOR

☐ SPRINT - WHITE

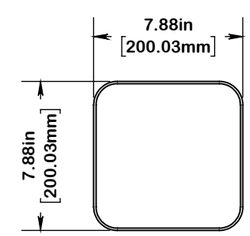

STANDARD STEP ☐
7.88in [200.03mm] x 7.88in [200.03mm]

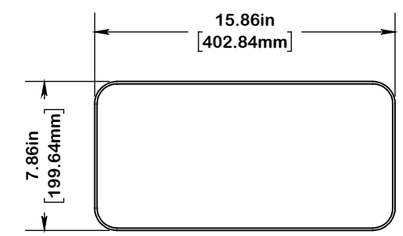

CUSTOM STEP ($) ☐
8.00in [203.20mm] x 16.00in [406.40mm]

SPECTRUM AQUATICS®
A PLAYCORE Company

7100 Spectrum Lane Missoula, Montana 59808
800.791.8056 www.spectrumproducts.com

ENGINEERING DATA

PRODUCT:	SPRINT - SP - MG		
MODEL #:	2510121	REVISION:	A
MATERIAL:	300 SERIES STAINLESS STEEL		
FINISH #:	PASSIVATE IAW ASTM A967		

NOTE:
△1 DIMENSIONS VARY WITH SPECIFIC APPLICATIONS. SPECIFICATIONS ARE NOMINAL AND ARE SUBJECT TO CHANGE. PLEASE CONTACT SPECTRUM AQUATICS FOR CUSTOM APPLICATIONS

SPECIAL REQUESTS:

A Friday, August 1, 2025 10:06:19 AM